USE CASE

SURFACE INSPECTION OF ENGINE'S CYLINDER HEADS

CLIENT/INDUSTRY BACKGROUND

The client is a German-based multinational engineering and technology company. Leading manufacturers of automotive parts through die-casting, are more than a billion-dollar company. Manufacturing and supply of cylinder heads are one of their major sources of revenues.

Cylinder heads are used to cover the cylinder block and maintain the pressure inside the cylinder.

PROBLEMS

- Manufacturing defects like scratched, dents cracks are being missed by the operators while inspection
- Failure in early detection of defects causing huge losses in resources and time
- Inspection at the final stage is very time consuming and also labor-intensive

PROBLEM IMPLICATIONS

- If the defects persist there may be inefficiency in compression and gas leak may occur
- Defective cylinder heads can easily displace valve, which may result in improper fuel intake or exhaustion of gases
- The cylinder head would not fit on to the cylinder block and the assembly would be incomplete
- Failure in early detection of the defects causes failure in finding out the root cause of them

CLIENT REQUIREMENTS

- To automate the process of inspection to early detect the defects with the desired accuracy
- To reduce the time of inspection
- To reduce/eliminate the labor

CURRENT PROCESS

The inspection is being done manually by operators at the very last stage.

BUSINESS IMPACT

1. Increase in labor training cost
2. Decrease in profitability due to product inefficiency
3. Increase in COQ(Cost Of Quality)

SOLUTION USING MACHINE VISION AND AI

A camera or set of cameras with appropriate illumination (red lights in this case) is set up to identify the defects on the cylinder head surface. Images are captured and sent to the software (Qualitas EagleEye® Platform) cloud where the training is done using the deep learning algorithm. Once the program is trained, real-time defect detection takes place, based on which the results are sent to PLC to take action.

SETUP

IMAGES

DETECTING DEFECTS IN QEP(QUALITAS EAGLE-EYE® PLATFORM)

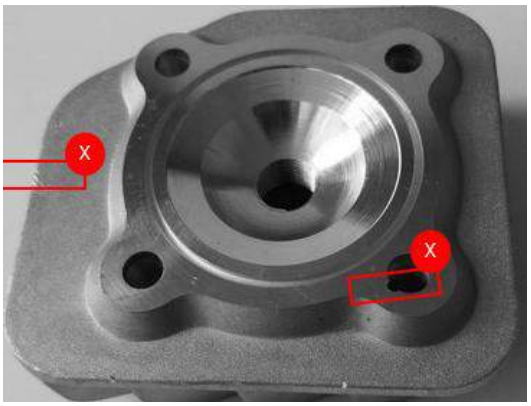

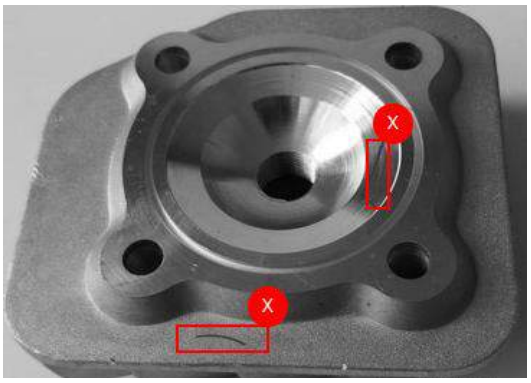

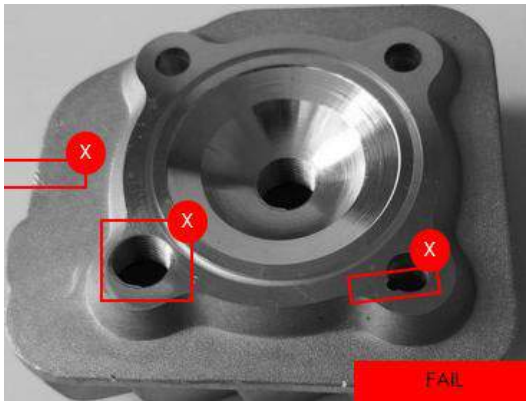

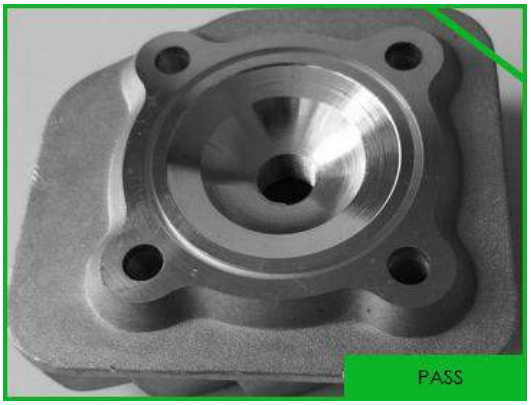

CONCLUSION

A POC(Proof Of Concept) was conducted and the following conclusion was observed -

1. The false acceptance rate is reduced to ~ 1-2%
2. The accuracy of defect identification is ~ 98%
3. Early detection is possible with the vision system and also the root cause can be found
4. The machine vision system has the potential to reduce/eliminate the cost of skilled labor

QUALITAS TECHNOLOGIES

http://www.qualitastech.com

Qualitas Technologies Pvt Ltd
53 Kempegowda Double Road, BEML Layout 5th Stage,
Raja Rajeshwari Nagar Bangalore 560098
INDIA
Email: info@qualitastech.com